DX274

Energy Management

DYNAMX™ SMART E-PICV 6-way valve

Datasheet
B-0943EN ↻ 05/2024

Valve DN15 with straight connections.

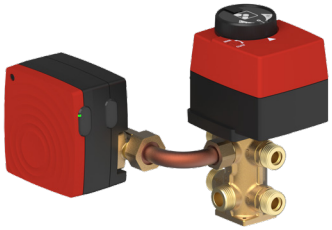

Valve DN15 with angled connections.

Valve DN25 with straight connections.

Valve with straith connections and ball valves (option)

The Dynamx™ 6-port control valve, combines five functions in one:
(1) a changeover valve,
(2) a control valve,
(3) a pressure-independent balancing valve,
(4) a shut-off valve and
(5) integrated room temperature control.

Dynamx™ is a data driven, visible flow control system, maximising comfort and efficieny and can be installed in any building where a traditional 4 pipe heating and cooling system would be deployed to terminal units such as fan coils, radiant panels, chilled beams or manifolds

Giacomini UK Limited
Unit 2 Goodrich Close - Westerleigh Business Park
Yate, BS37 5YT - United Kingdom
+441454 311012 - giacomini.com

Versions and product codes

PRODUCT CODE	CONNECTIONS	SECONDARY CONNECTIONS	Intelligent Room Control (IRC)	2 temperature sensors (Energy Management)
DX274CY263	5 x G 1/2"M + 1 x G 3/4"M	straight	-	-
DX274CY363	5 x G 1/2"M + 1 x G 3/4"M	straight	✔	-
DX274CY463	5 x G 1/2"M + 1 x G 3/4"M	straight	-	✔
DX274Y265	6 x G 1"M	straight	-	-
DX274Y365	6 x G 1"M	straight	✔	-
DX274Y465	6 x G 1"M	straight	-	✔
DX274CY213	5 x G 1/2"M + 1 x G 3/4"M	angled	-	-
DX274CY313	5 x G 1/2"M + 1 x G 3/4"M	angled	✔	-
DX274CY413	5 x G 1/2"M + 1 x G 3/4"M	angled	-	✔
DX274Y215	6 x G 1"M	angled	-	-
DX274Y315	6 x G 1"M	angled	✔	-
DX274Y415	6 x G 1"M	angled	-	✔

Options:
DX493X001: temperature sensor for Intelligent Room Control (IRC) models

Giacomini UK Limited
Unit 2 Goodrich Close - Westerleigh Business Park
Yate, BS37 5YT - United Kingdom
+441454 311012 - giacomini.com

Accessories

DIMENSION	Product Code and Description			
1/2'' DN 15	P15FY013 (1/2''F x 1/2''F)		P15Y018 (1/2''F x 1/2''M)	
	R251PX012 (1/2''F nut x 1/2''F - red lever - 1 wing)			
	R254PY012 (1/2''F nut x 1/2''M - red lever - 1 wing)		R254PY112 (1/2''F nut x 1/2''M - blu lever - 1 wing)	
	R780PX013 (1/2''F nut x 1/2''M - red lever - 1 wing - square)		R780PX053 (1/2''F nut x 1/2''M - blu lever - 1 wing - square)	
	R781PX013 (1/2''F nut x 1/2''F - red lever - 1 wing - square)		R781PX053 (1/2''F nut x 1/2''F - blu lever - 1 wing - square)	
1'' DN 25			P15Y015 (1''F x 1/2''M) P15Y016 (1''F x 3/4''M) P15Y017 (1''F x 1''M)	
	R251PY036 (1''F nut x 1''F - red lever)		R251PY086 (1''F nut x 1''F - blu lever)	
	R274WY011 (cross-linked PE insulation for 6-way valve)			

Giacomini UK Limited
Unit 2 Goodrich Close - Westerleigh Business Park
Yate, BS37 5YT - United Kingdom
+441454 311012 - giacomini.com

Description

Models with Intelligent Room Control (IRC)

Dynamx™ E-PICV measures flow rate using an ultrasonic flow sensor connected to the actuator on the 6 way valve body. The internal flow controller of the Dynamx™ valve receives a set point for the room. Internally, this set point is converted into a flow set point, either heating or cooling.
The integrated flow sensor continuously measures the actual flow rate. The internal control loop compares the actual flow rate with the required flow rate and adjusts the position of the control valve until the measured flow rate equals the required flow rate set point.
The Dynamx™ will control the flow rate in the direction of the desired setpoint, independent of possible pressure fluctuations in the system, e.g. in case of partial load. The control valve automatically adapts to the system parameters and searches for the ideal set point to ensure maximum user comfort with minimum energy consumption.

How it works
Dynamx™ has 4 basic building blocks, namely a:
> flow controller
> flow sensor
> valve
> actuator

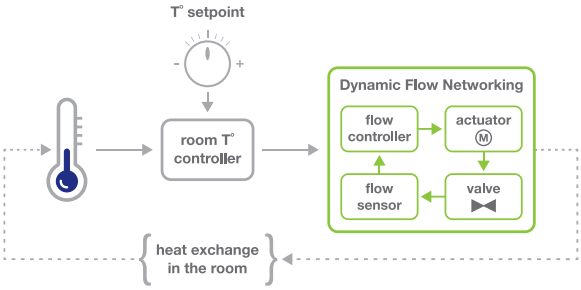

Flow controller
In this analogue mode, the internal flow controller of the Dynamx™ valve receives a set point (from the room T° controller) as a split-range Y1 : 0÷10 Vdc control signal (heating mode: 0.5÷4.5 Vdc and cooling mode: 5.5÷9.5 Vdc). Internally, this set point is converted into a flow set point, either heating or cooling:

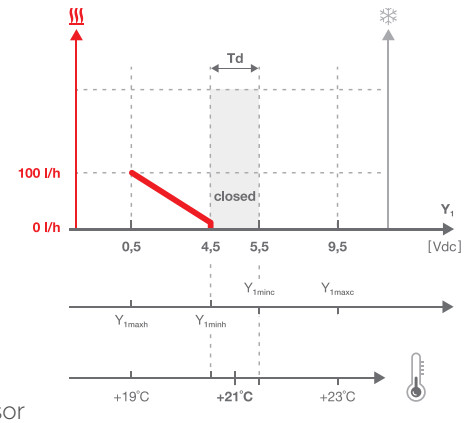

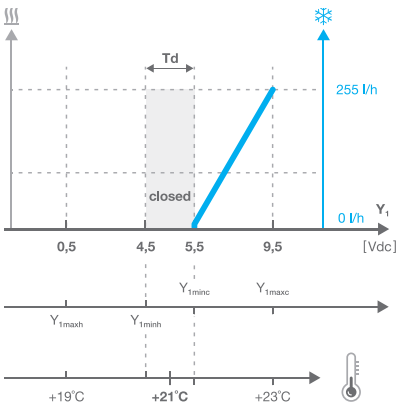

Flow sensor
The integrated flow sensor continuously measures the actual flow rate. The internal control loop compares the actual flow rate with the required value and adjusts the position of the control valve until the measured flow rate equals the required flow rate set point.

Valve and actuator
Thus, the Dynamx™ will control the flow rate in the direction of the desired set point, independent of possible pressure fluctuations in the system, e.g. in case of partial load. The control valve automatically adapts to the system parameters and searches for the ideal set point to ensure maximum user comfort with minimum energy consumption.

The output signal X1 : 0÷10 Vdc representing the measured flow can be used to monitor the actual flow rate.
Thanks to this innovative technology, Dynamx™ control valves can be used in a much larger flow range than conventional control valves.

Giacomini UK Limited
Unit 2 Goodrich Close - Westerleigh Business Park
Yate, BS37 5YT - United Kingdom
+441454 311012 - giacomini.com

Description

Models with 2 temperature sensors (Energy Management) but without IRC

In systems where the Dynamx™ E-PICV without IRC is installed, the Building Management System collects for all the zones in the building the information about the setpoints for the room temperature and the actual room temperatures in the corresponding zone, and sends a control signal Y1 : 0÷10 Vdc (heating mode: 0.5÷4.5 Vdc and cooling mode: 5.5÷9.5 Vdc) to the valves.
Depending on the control signal, the position of the valve and the flow rate through the valve will change and so the heat exchange with the room with decrease or increase, with the purpose of obtaining an actual room temperature equal to the programmed set point.
The 2 temperature sensors can be used for internal Energy Management of the system: the temperature sensors measure the flow and the return temperature of the system, and this information, together with the actual flow rate is accessible via the Modbus or BACnet interface.

Comments:
The data of the 2 temperature sensors is purely informational and is not used in the control algorithm of the Dynamx™ E-PICV.
The data measured by the 2 temperature sensors and by the ultrasonic flow sensor is not MID compliant and therefore cannot be used for energy billing.

Models without 2 temperature sensors and without IRC

Because of the fact that the data of the temperature sensors is not used in the control algorithm of the Dynamx valves, the functioning of these Dynamx™ E-PICV without 2 temperature sensors and without IRC is identical to the functioning of the above described Dynamx™ E-PICV with the 2 temperature sensors.

Giacomini UK Limited
Unit 2 Goodrich Close - Westerleigh Business Park
Yate, BS37 5YT - United Kingdom
+441454 311012 - giacomini.com

Technical data

CHARACTERISTIC	VALUE
Electrical	
Power supply	24 Vac (-10 % / +6 %) - 50 Hz
Consumption - during control	3,5 W (4,5 VA)
Consumption - stationary	1,5 W (2 VA)
Input signal	0÷10 Vdc (0,17 mA) , split range 0,5÷4,5 Vdc: heating mode (from max flow to 0 %) 5,5÷4,5 Vdc: cooling mode (from max flow to 0 %)
Feedback signal	0÷10 Vdc (<= 2 mA) actual flow, scaled to max settings for heating or cooling
Electric wiring - main cable	1 m PVC cable, 7 x 0,5 mm^2
Electric wiring - digital inputs	1 m PVC cable, 4 x 0,14 mm^2
Hydraulic	
Fluid	water (glycol free) - according to VDI 2035
Temperature range	5÷90 °C
Max working pressure	16 bar (1600 kPa)
Differential pressure - min Differential pressure - max	no minimum differential pressure required 2 bar (200 kPa)
Kvs value - 1/2" Kvs value - 1"	1,4 m^3/h 2,5 m^3/h
Setpoint flow	via 0÷10 Vdc or via bus communication or via APP (Bluetooth)
Control characteristic	equal percentage (factory setting) or linear
Flow measurement	ultrasonic TTM, without moving parts
Valve leakage	class A (air-bubble tight) - according to EN 12266-1
Mechanic	
Actuator torque	min 8 Nm at nominal voltage
Manual override	possibility to disengage gearbox via external switch
Noice level during actuation	< 30 dB(A)
Bus communication	
Interface	RS485 (not isolated)
Protocols	MODBUS (RTU/MSTP - slave) - BACnet (MSTP - slave) Bluetooth (via license-free APP) (MultiProtocol)
	Easy integration in Building Management Systems (BMS)

Giacomini UK Limited
Unit 2 Goodrich Close - Westerleigh Business Park
Yate, BS37 5YT - United Kingdom
+441454 311012 - giacomini.com

Installation - commissioning - maintenance

The valve has been preassembled in the factory, with specific position for the flow sensor. The angle between the flow sensor and the valve body should not be changed or the flow sensor should not be disconnected under no circumstances.

To avoid air bubbles being trapped in the flow sensor, avoid installation at the highest point of the installation.
The flow meter may be installed in horizontal and vertical position (the actuator must not be mounted upside down, and the red cover of the flowmeter must not be mounted horizontally).

The connection of the pipes to the primary (heating and cooling) and the secondary ports of the valve is indicated with a number from 1 to 6:

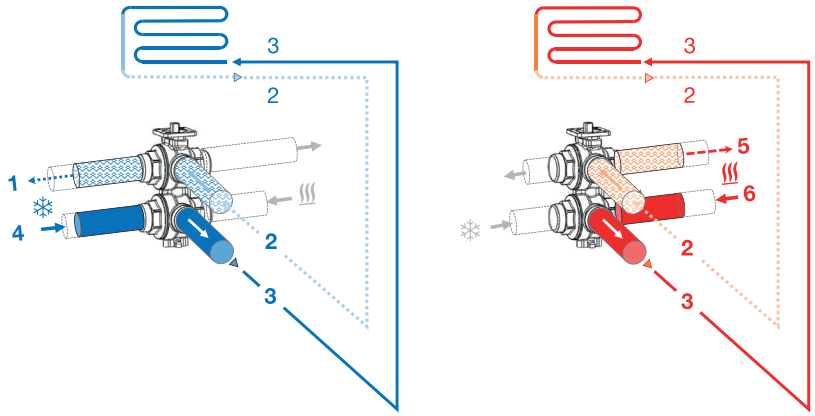

The valves are preprogrammed in the factory, but by using the MODBUS or BACnet connection or through the integrated Bluetooth technology and the license-free APP, all parameters are easily accessible during commissioning and afterwards during normal operation of the system.

The valves requires no maintenance once installed, However periodical inspection is recommended to check regular operation of the actuator and the presence of possible hydraulic leaks.

Overpressure protection system

When a 6-way valve is closed (no heating or cooling), the fluid inside the usage point circuit can be completely isolated.
The pressure of the fluid inside the usage point circuit may therefore increase or decrease when the fluid temperature changes as a consequence of the room temperature. **The Giacomini 6-way valve features an integrated overpressure protection to offset such pressure variations.**
The cartridge in the top of the valve features a passage inside **(ref. A)** which keeps the "usage point" connected to the cooling source, even when the valve is closed (45° stem position).
The combined action of these two parts (top and bottom) prevents the fluid from flowing when the valve is closed.
The overpressure protection system does not affect the hydraulic separation between the two circuits (heating and cooling source): the two hydraulic sources are always separated.

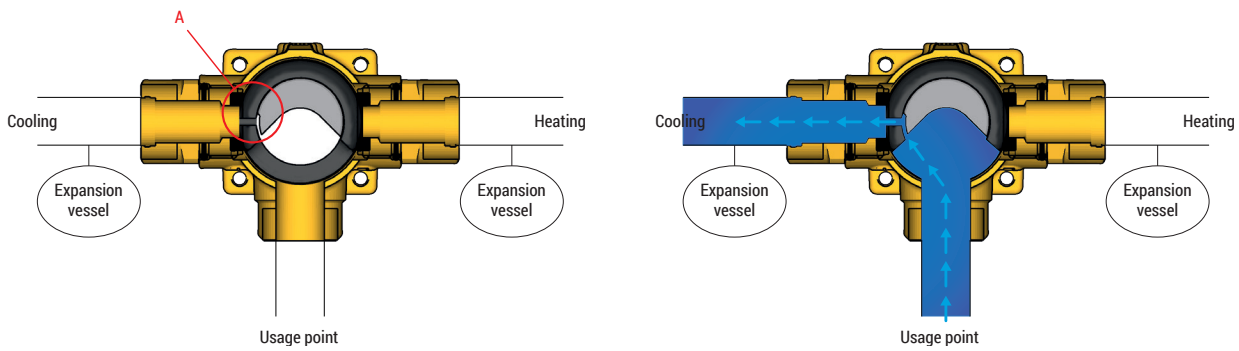

Giacomini UK Limited
Unit 2 Goodrich Close - Westerleigh Business Park
Yate, BS37 5YT - United Kingdom
+441454 311012 - giacomini.com

Cabling data

Standard models: DX274CY263 - DX274CY265 - DX274CY213 - DX274CY215

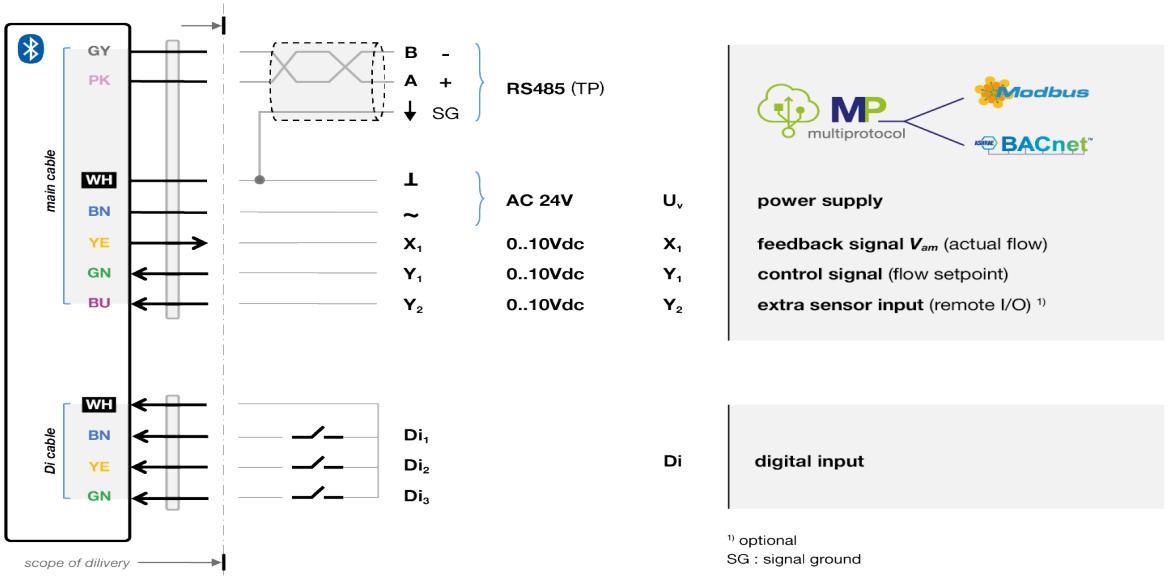

Models with IRC: DX274CY363 - DX274CY365 - DX274CY313 - DX274CY315

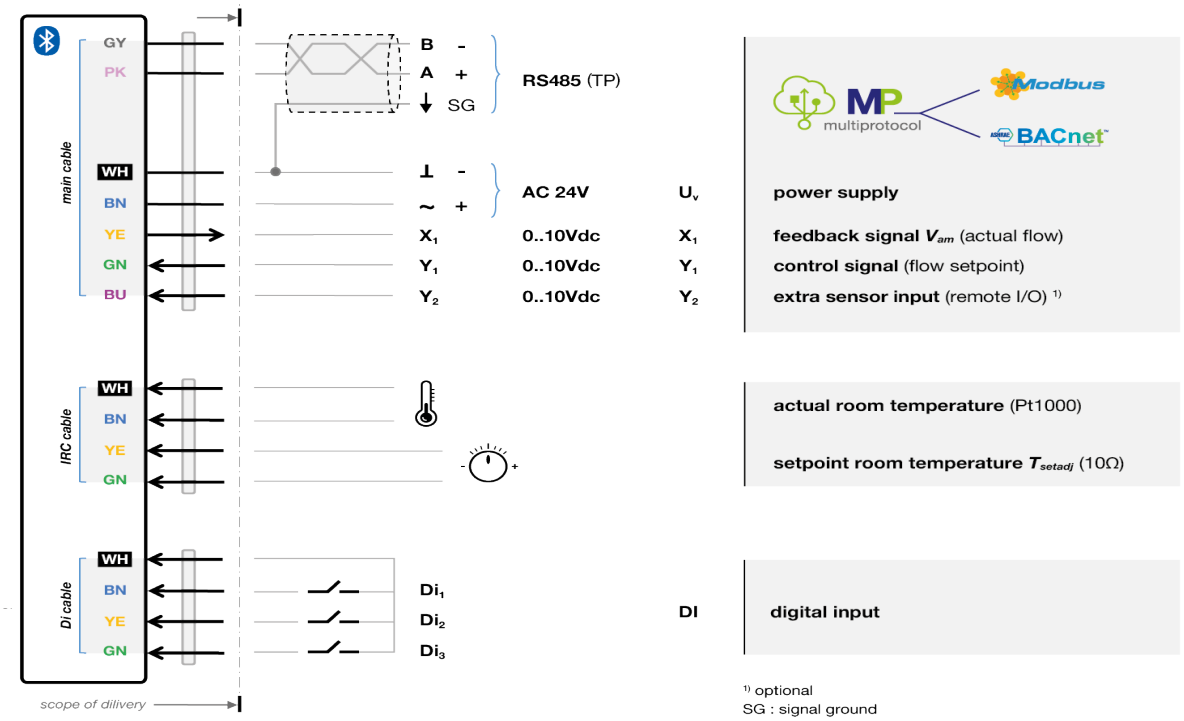

Cabling data

Models with 2 temperature sensors: DX274CY463 - DX274CY465 - DX274CY413 - DX274CY415

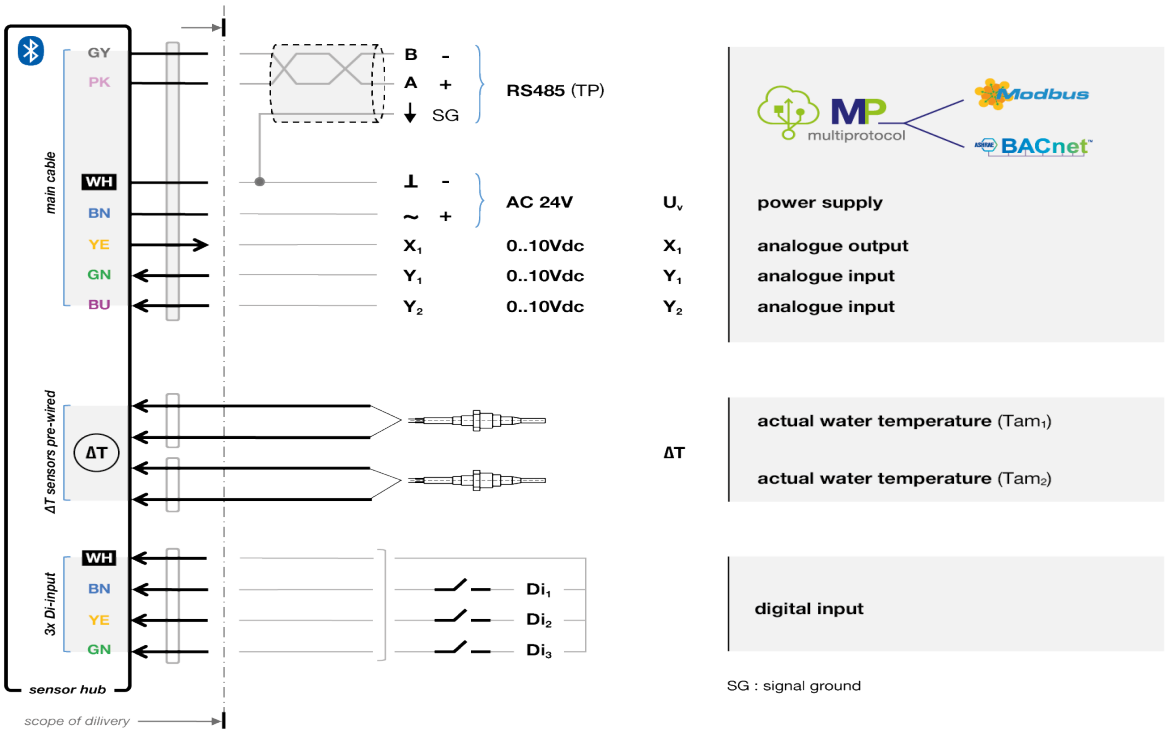

Dimensions for the straight versions (in mm)

DN15 versions with center-distance 40 mm:

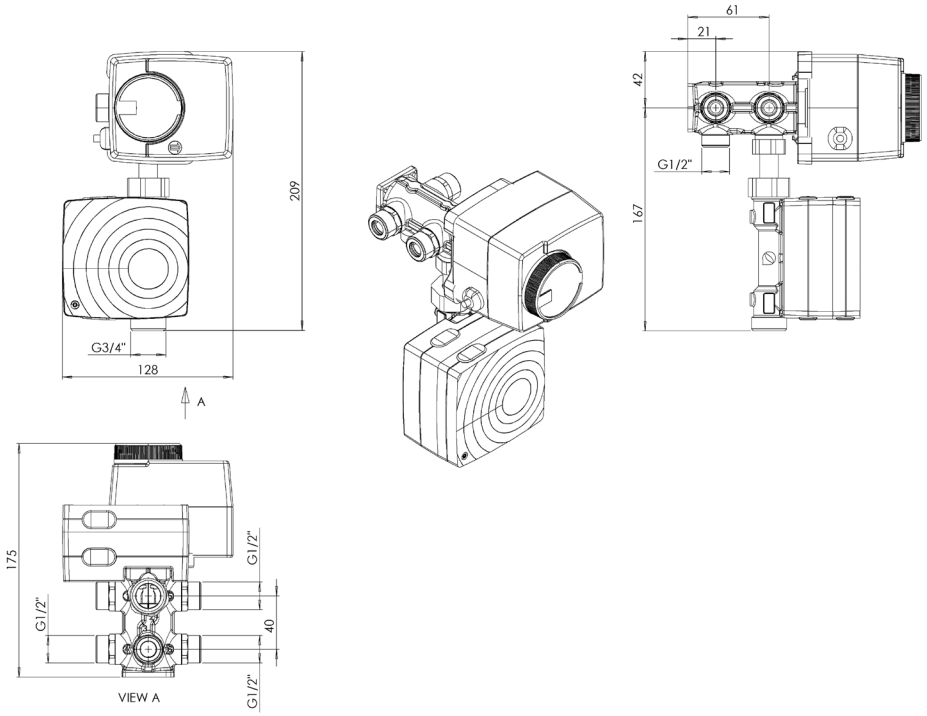

DN25 versions with center-distance 60 mm:

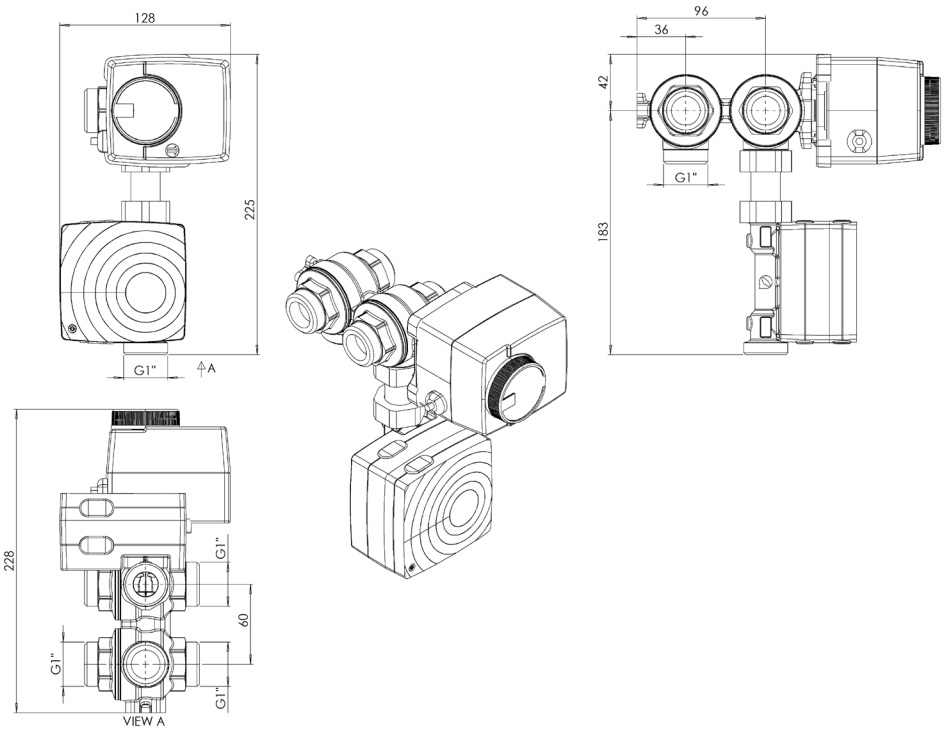

Giacomini UK Limited
Unit 2 Goodrich Close - Westerleigh Business Park
Yate, BS37 5YT - United Kingdom
+441454 311012 - giacomini.com

Dimensions for the angled versions (in mm)

DN15 versions with center-distance 40 mm:

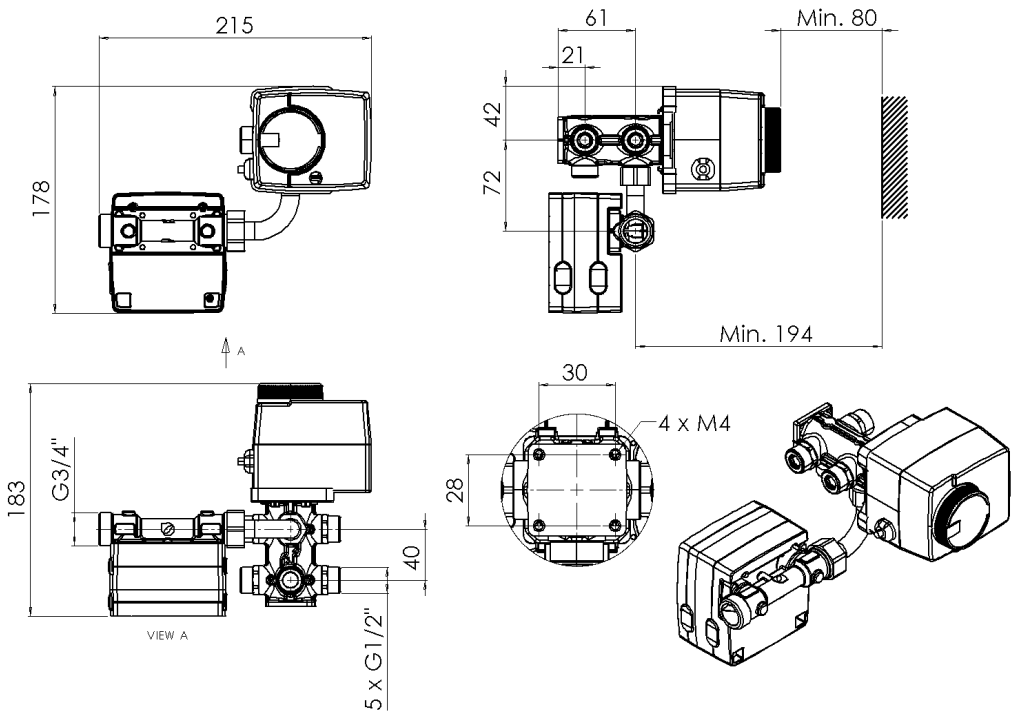

DN25 versions with center-distance 60 mm:

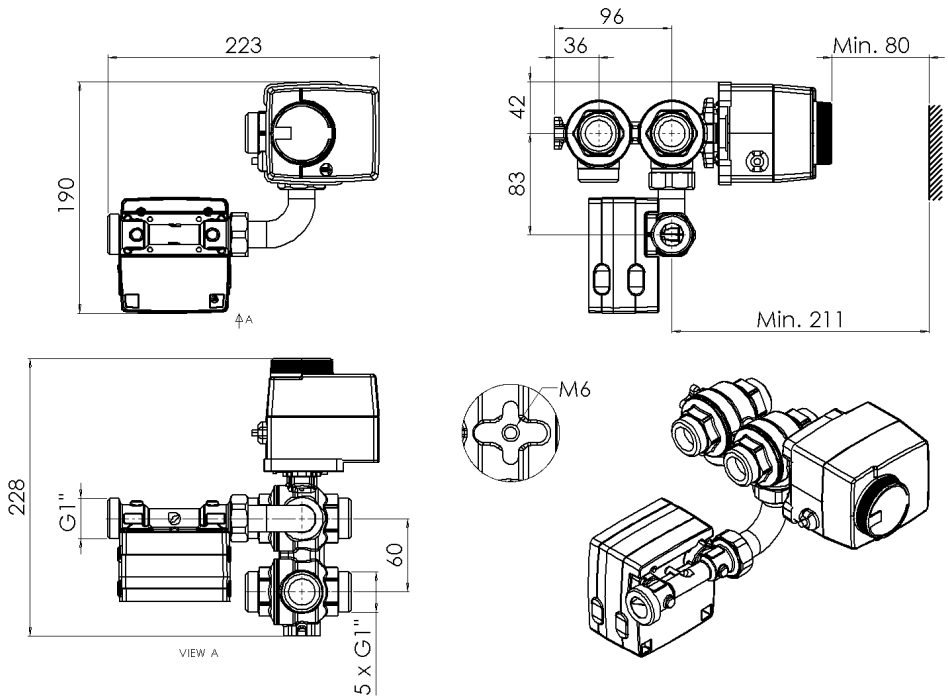

Giacomini UK Limited
Unit 2 Goodrich Close - Westerleigh Business Park
Yate, BS37 5YT - United Kingdom
+441454 311012 - giacomini.com

UNIT OF MEASUREMENT.

1 bar = 100 kPa

1 m^3/h = 1000 l/h = 16,7 l/min = 0,28 l/s

Safety Warning. Installation, commissioning and periodical maintenance of the product must be carried out by qualified operators in compliance with national regulations and/or local standards. A qualified installer must take all required measures, including use of Individual Protection Devices, for his and others' safety. An improper installation may damage people, animals or objects towards which Giacomini S.p.A. may not be held liable.

Package Disposal. Carton boxes: paper recycling. Plastic bags and bubble wrap: plastic recycling.

Additional information. For more information, go to giacomini.com or contact our technical assistance service. This document provides only general indications. Giacomini S.p.A. may change at any time, without notice and for technical or commercial reasons, the items included herewith. The information included in this technical sheet do not exempt the user from strictly complying with the rules and good practice standards in force.

Product Disposal. Do not dispose of product as municipal waste at the end of its life cycle. Dispose of product at a special recycling platform managed by local authorities or at retailers providing this type of service.

GIACOMINI
WATER E-MOTION

Giacomini UK Limited
Unit 2 Goodrich Close - Westerleigh Business Park
Yate, BS37 5YT - United Kingdom
+441454 311012 - giacomini.com